OPTIONAL LINEALS

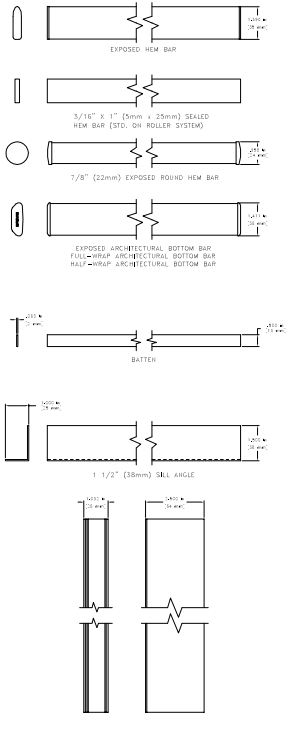

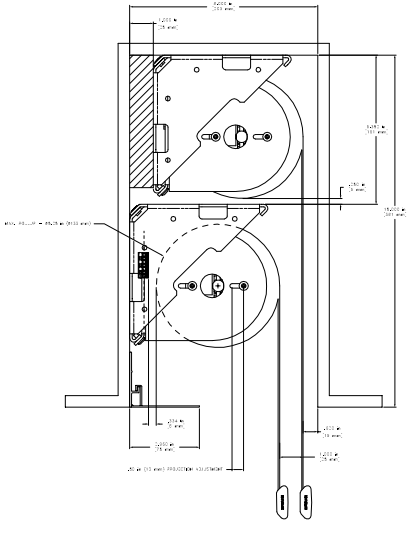

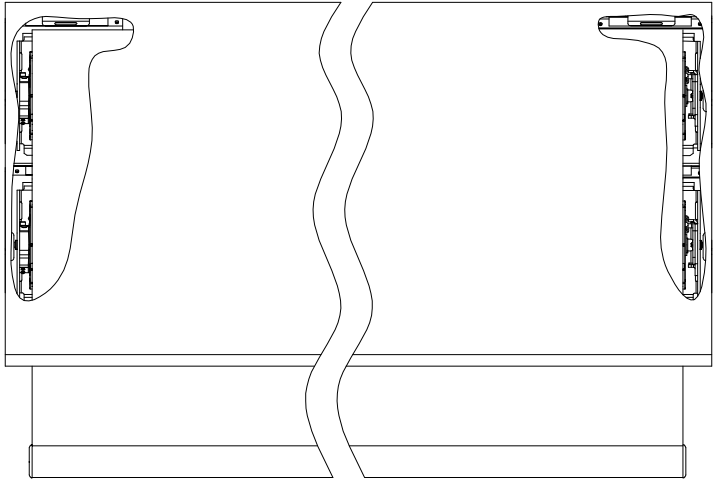

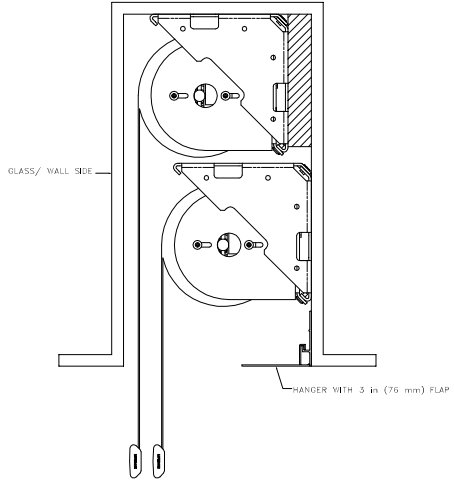

NOTES:

1. ROLLER TUBE OD = #3.75 in (#95 mm).