LUTRON®
WORLD HEADQUARTERS: +1.610.282.3800
TECHNICAL SUPPORT CENTER: +1.800.523.9466
CUSTOMER SERVICE/ QUOTES: +1.800.446.1503
EMAIL: shadinginfo@lutron.com
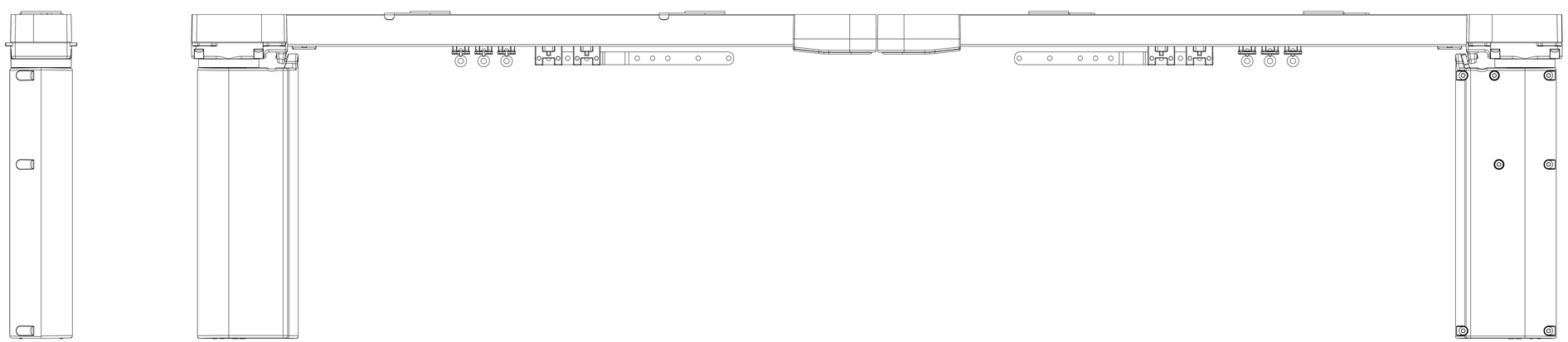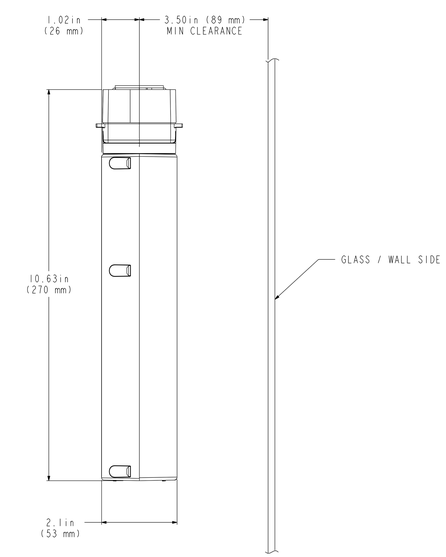
SIVOIA QED ENHANCED DRAPERY CEILING MOUNT STRAIGHT TRACK TANDEM DRAW